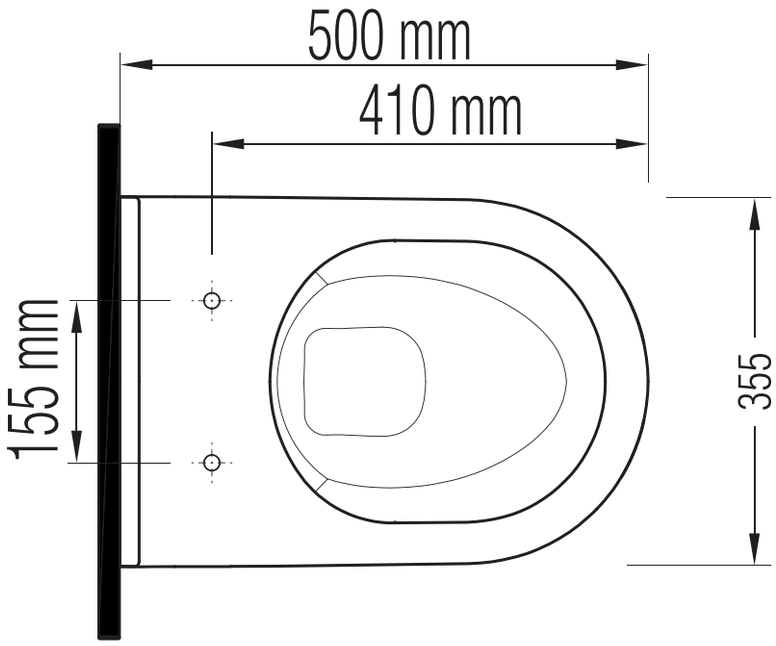
500 mm
410 mm
155 mm
355

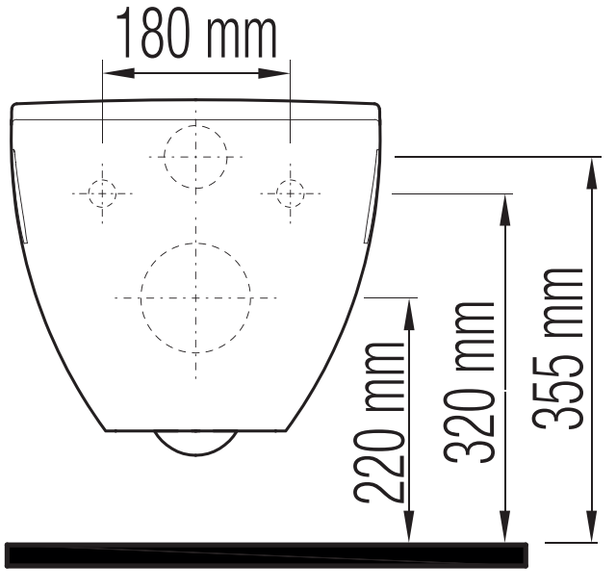
180 mm
220 mm
320 mm
355 mm

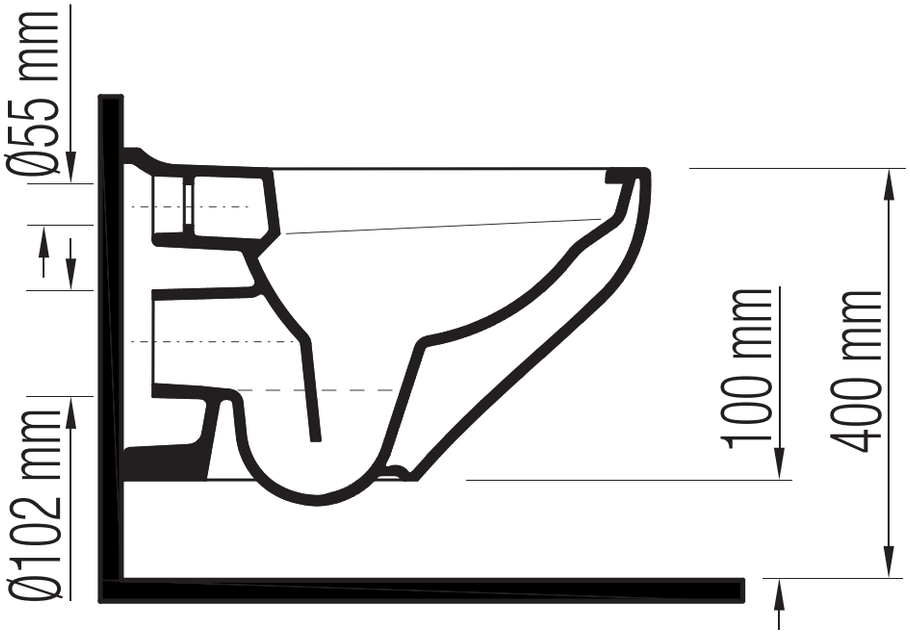
Ø55 mm
Ø102 mm
100 mm
400 mm