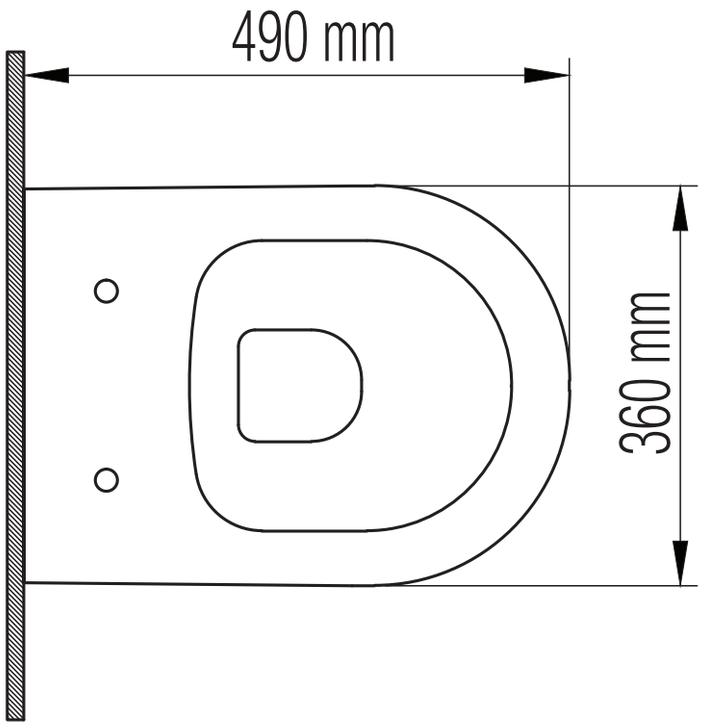
490 mm
360 mm

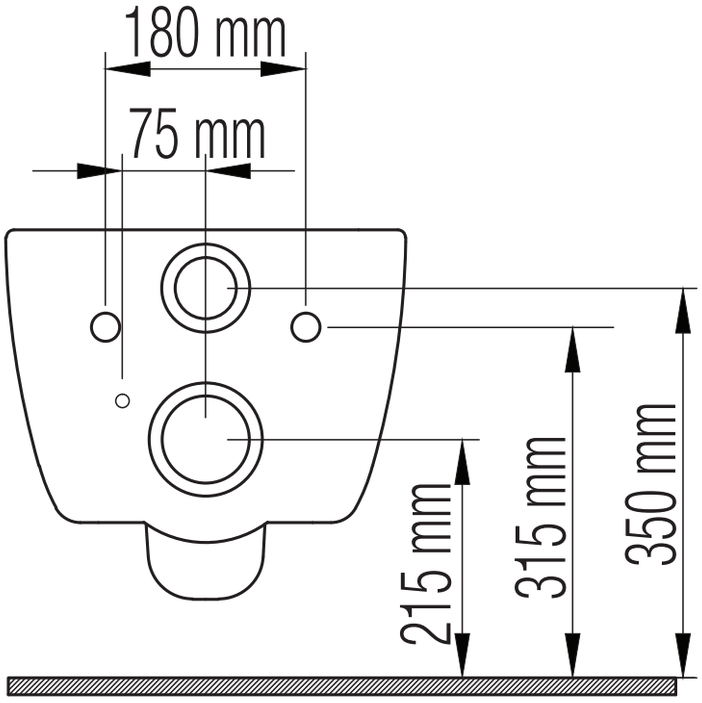
180 mm
75 mm
215 mm
315 mm
350 mm

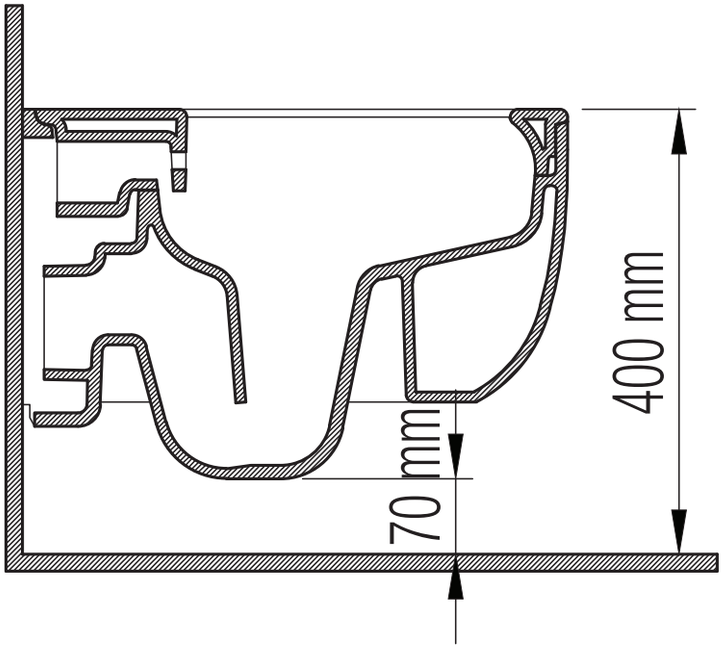
400 mm
70 mm